displayit
800.207.0311 displayit.com

Elements Display General Assembly Instructions

Note: Assembly is the same for all shapes and sizes of Elements Frames

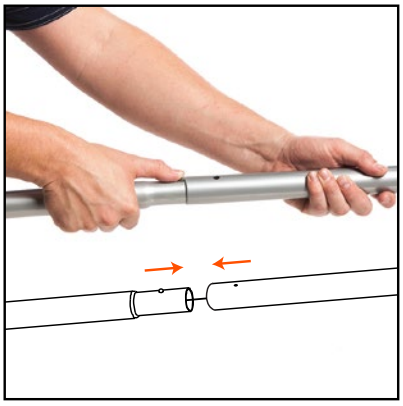

1. Straighten and assemble all bungeed poles.

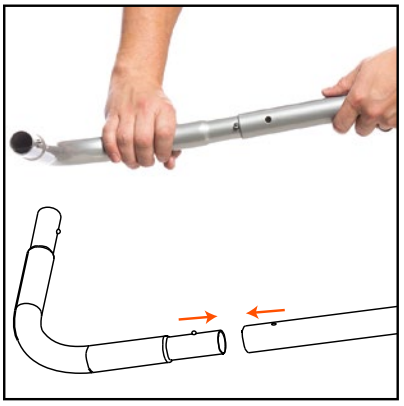

2. Connect poles to corners. (See diagram to on next page)

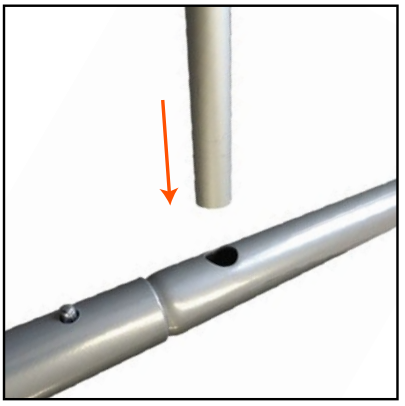

3. If your kit includes a center support pole, insert it into the corresponding holes, located in the top and bottom poles of the frame.
Frames over 100" wide recquire support poles

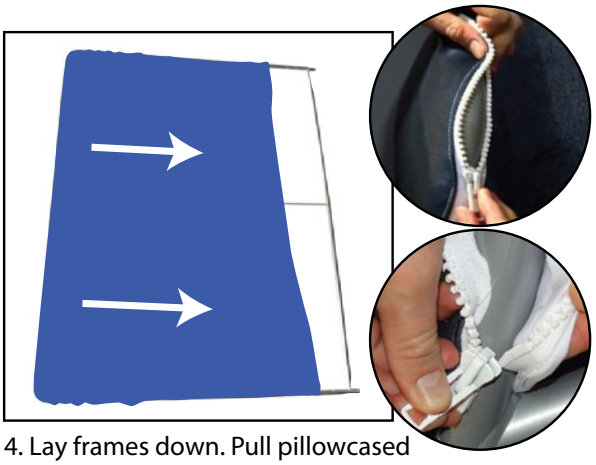

4. Lay frames down. Pull pillowcased graphic over frame and zip closed.

5a. Clamp optional lights clamp on top bar.
Tip: Put lights on before standing the display up.

5b. Slide light onto clamp and connect power cable.

6a. If your foot is not preassembled, slide the included screw through the bottom and twist the nub until firmly in place. Or, optionally screw the nub in with a screw driver (not included).

6b. If your kit includes a single foot, attach it to bottom of frame. Secure foot with locking pin.

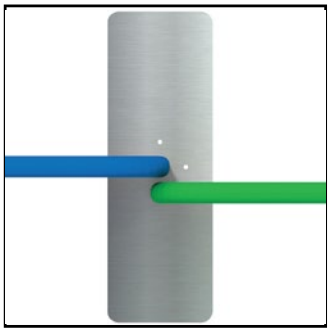

6c. If your kit includes a double foot, connect as seen above. Frame on right (shown in green above) attaches to the front foot nub and overlaps the back frame by approximately 1.5".

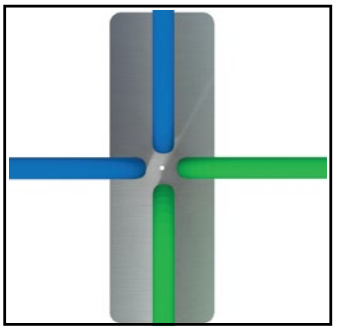

6d. Nubs can be disassembled and arranged in many variations. A total of four frames can be attached to a single foot. Experimentation is encouraged!

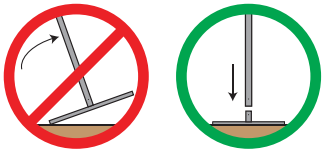

Mount feet **after** frame is standing up.
Failure to do so may damage feet.

Updated 9/25/2017

displayit

800.207.0311 displayit.com

Elements Island Kit C
Diagram of Frames

Hardware is labeled as seen in diagram below:

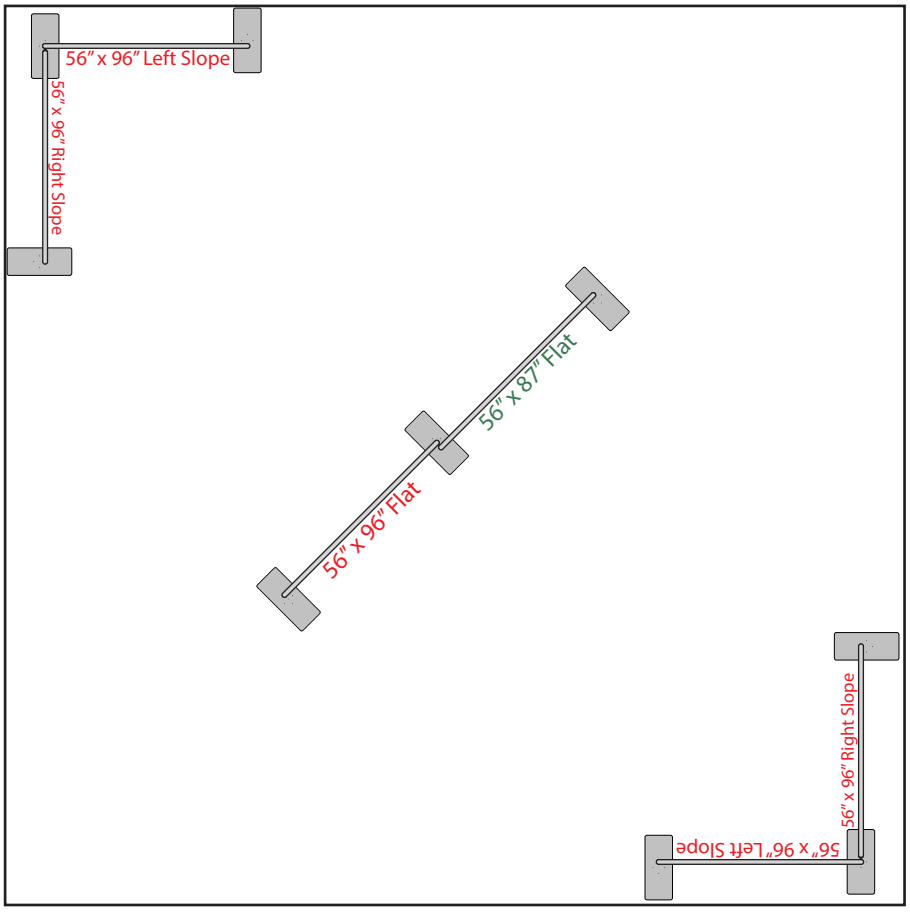

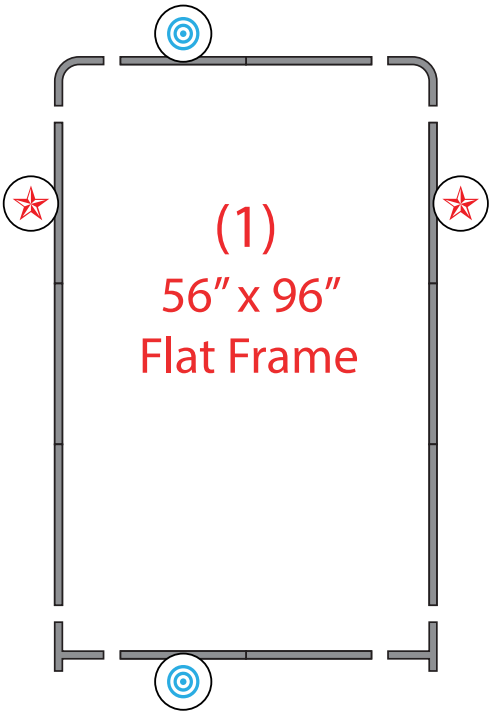

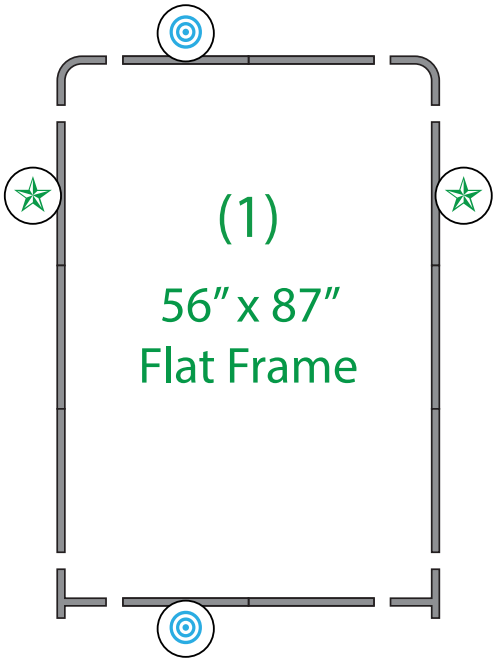

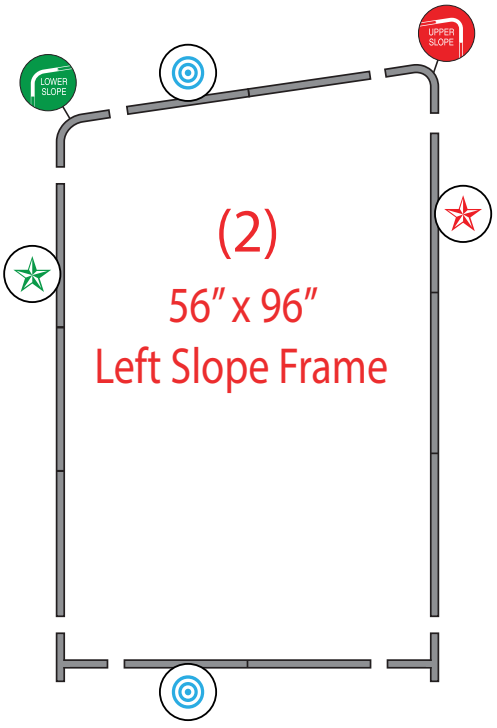

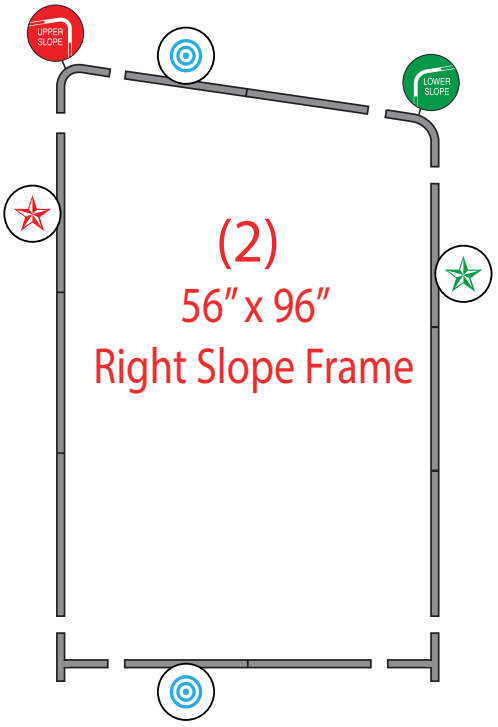

Updated 3/18/2015