Large Knockout Hard Counter with Locking Door Assembly Instructions Page 1

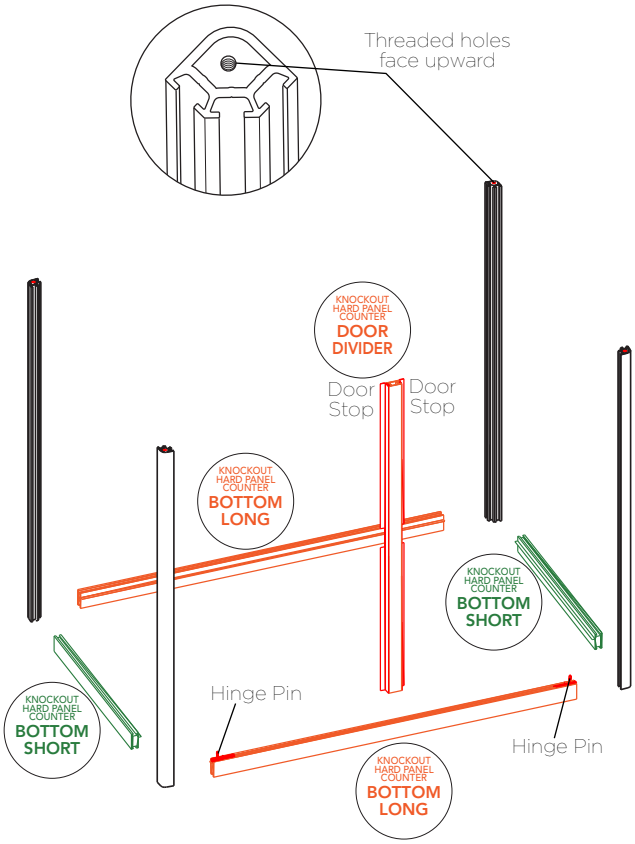

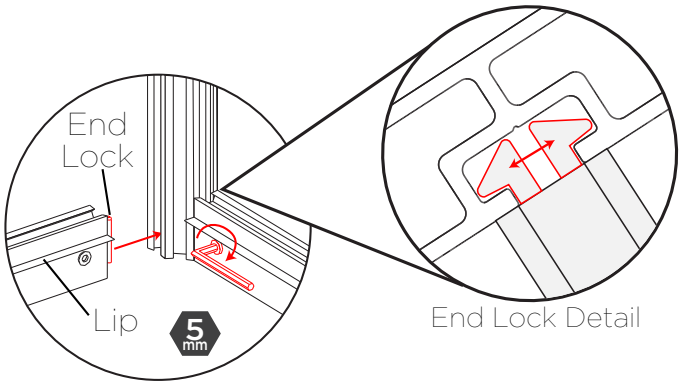

1. Connect the four bottom pieces to the corner columns. See the diagram to the left for the location of the hinge pins and the threaded holes in the top end of the columns.

Insert the end lock into the vertical channel. Tighten the set screw with a 5mm allen wrench until the end lock's jaws open and grip the channel. Do not overtighten.

Note: Make sure the lip of the bottom bars are oriented towards the top.

Attach the door divider to the long bottom bar halfway between the hinge pins. Make sure the door stops are oriented towards the insde of the counter.

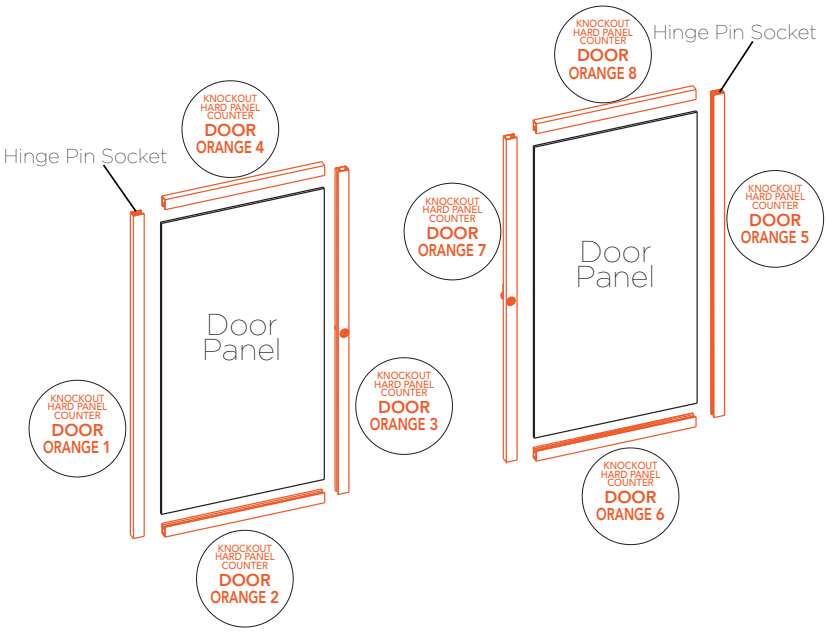

2. Assemble the doors, trapping the door panels inside the four sides.

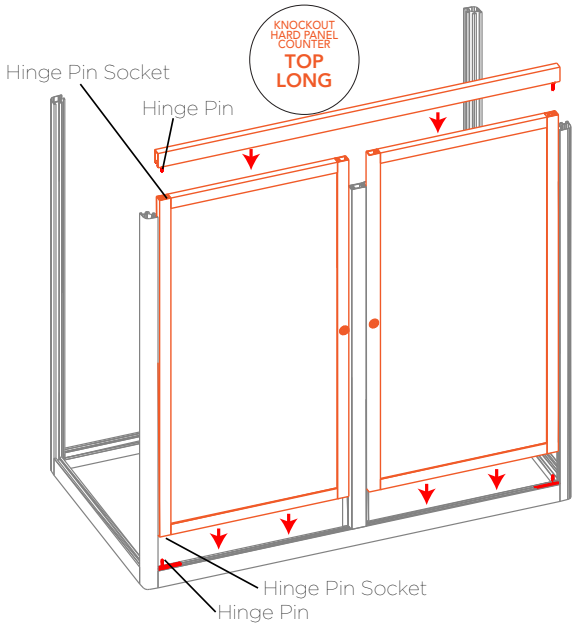

3. Install the doors. The hinge pins slide inside the hinge pin sockets on the door vertical. Hold the doors in place while installing the top bar with hinge pins.

Large Knockout Hard Counter with Locking Door
Assembly Instructions Page 2

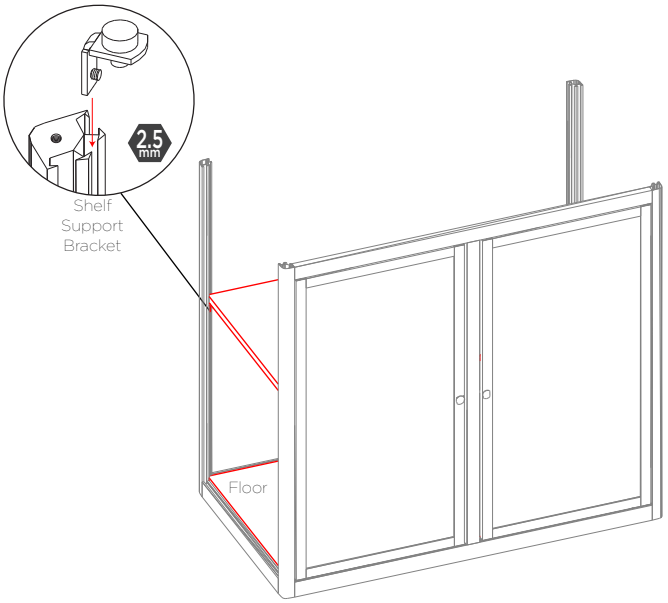

4. Install counter floor, resting on the lip around the perimeter. Install the optional shelf support brackets and set the shelf on top.

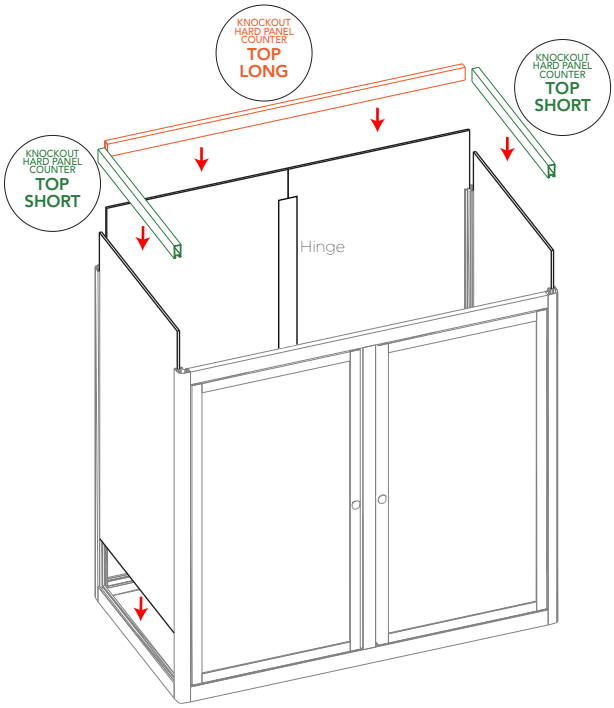

5. Install the side panels, sliding them into the channels from above.

The long side graphic panel is split into two pieces and hinged to fold for shipping purposes.

Secure the panels with the top horizontals. Lock them in place.

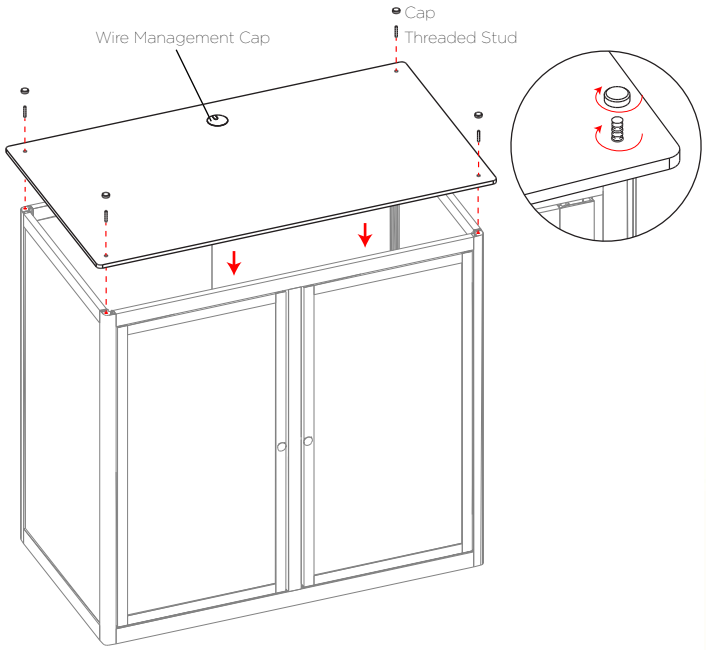

6. Install the countertop with four threaded studs and caps. Install included wire management cap to hide the wire management hole.