# Reveal ER Banner Stand Assembly Instructions

800.207.0311 displayit.com

1. Remove the bungeed pole from the back of the banner stand base.

2. Swivel the two stabilizing feet out from the bottom of the base.

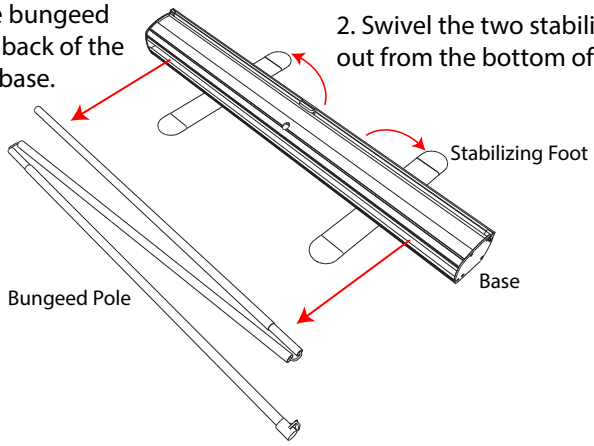


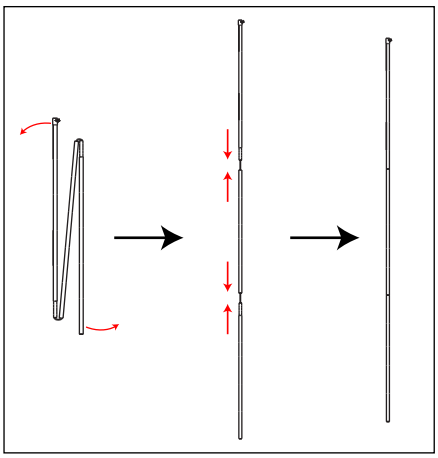

3. Straighten out the bungeed pole.

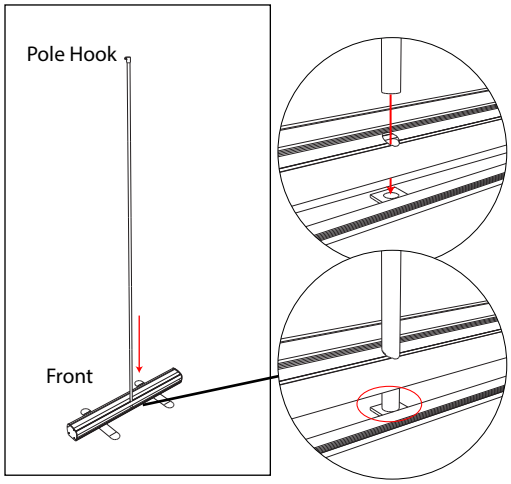


4. Insert the pole into the base with the pole hook facing the front. Make sure the pole is fully seated into the base.

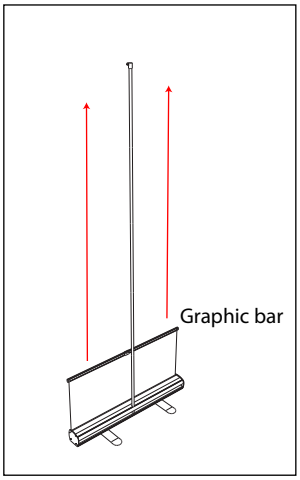


5. Gently pull the graphic out of the base by pulling up on the graphic bar.

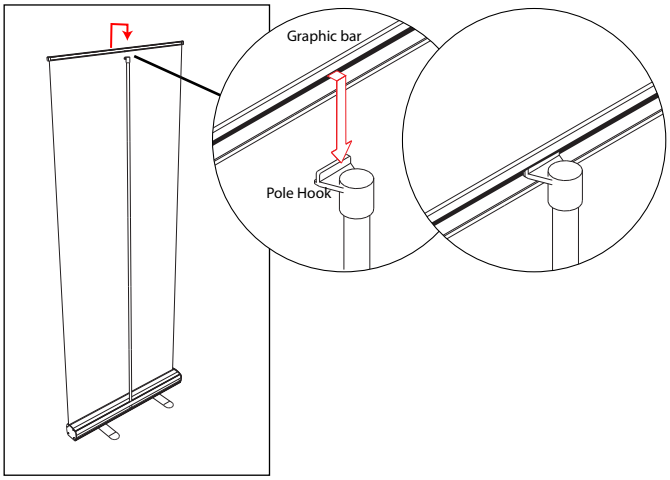


6. Hook the graphic bar onto the top of the pole.

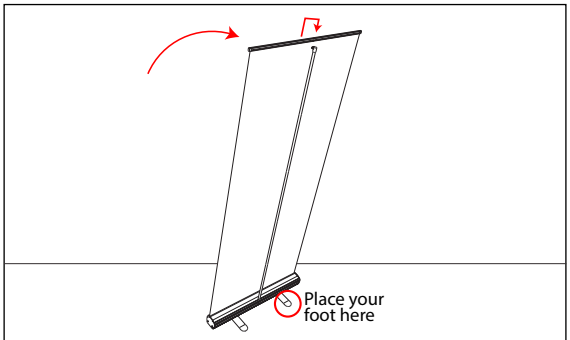


Note: If you can't reach the top of the pole, you may lean the banner stand back towards you. Keep your foot on the banner stand foot to keep the base from moving.
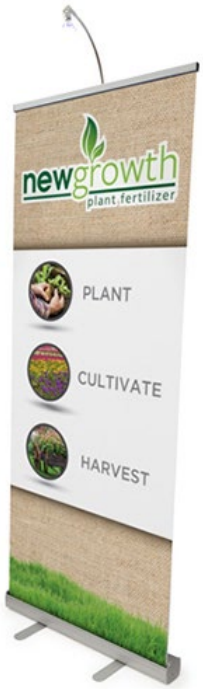
Snap optional LED light onto the pole and plug it in.
*Note: LED light may be hard to snap onto the pole the first time.*